APPENDIX A: RAINBOX CONSTRUCTION

Materials List (Quantity in parentheses)

- (1) $^{7}/_{16}$" Thick Plywood, 41" x 9⅜"
- (2) 1" x 3" Boards, 41" long
- (1) 1" x 2" Board, 7 ⅞" Long
- (1) 1" x 3" Board, 7 ⅞" Long
- (2) $^{7}/_{16}$" Thick Plywood, 1" x $^{43}/_{16}$"
- (1) $^{7}/_{16}$" Thick Plywood, 9 ⅜" x 1 ⅝"
- (1) ¾" Diameter Plastic Outfall Tube
- 1½ " Long, Small Wood Nails
- 1" Long, Small Wood Nails
- Polyurethane Wood Sealant W/ Gloss Finish

Tools List

- Hammer
- Wood Glue
- Sand Paper
- Black Marker
- 2" Paintbrush

Instructions

1. Cut all boards to size per materials list and lightly sand.
2. Using marker & straight edge, draw solid black line 2" from bottom of boards "B" & "D."
3. Assemble frame as shown in Fig. 1-A using wood glue & nails specified.
    a. Bottom of boards "C" & "D" shall be flush with bottom of the "B" boards.
    b. Top of "D" board shall be flush with top of "B" boards.
    c. Top of "C" board shall be flush with line drawn from Step 2.

Fig. 1-A

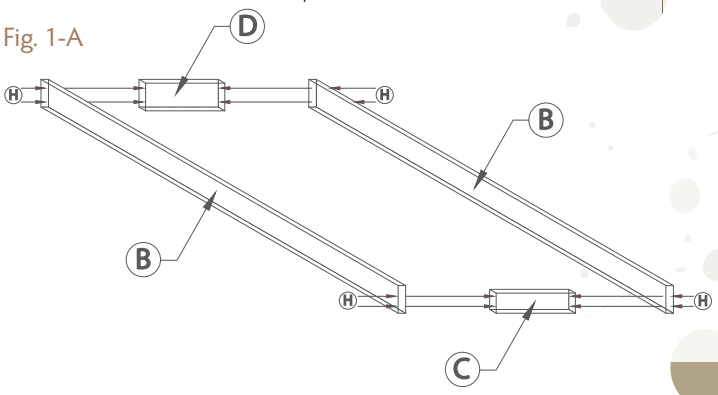

The rainboxes can be used for many years once they have been built and provide a scaled way to demonstrate erosion principles and practices.

4. Attach board "A" to bottom of frame built in step 3 as shown in using wood glue & nails specified Fig. 2-A.

Fig. 2-A

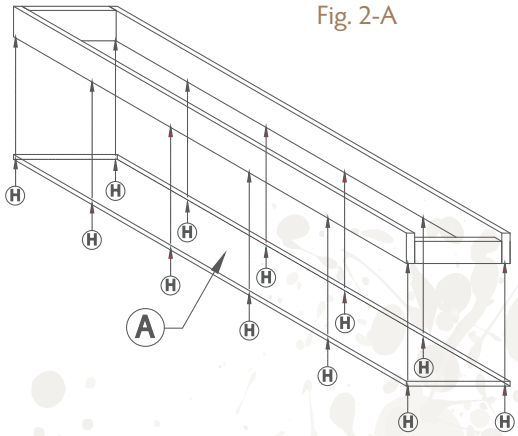

5. Attach boards "E" at an angle as shown in Fig. 3-A using wood glue & nails specified.
    a. Outer edge of boards "E" shall be flush with top of board "C".
    b. Inner edge of boards "E" shall be angled as such the bottoms are 1½" from bottom of box and having roughly a 1" space between them.

Fig. 3-A

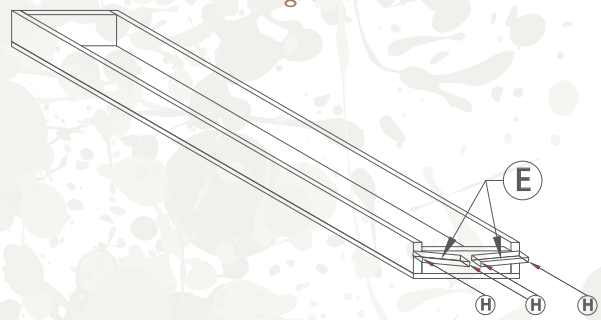

6. Attach board "F" to boards "E" as shown in Fig. 4-A
   a. Top of board "F" shall be flush with top of box (boards "B" & "D"). Using wood glue & nails specified

Fig. 4-A

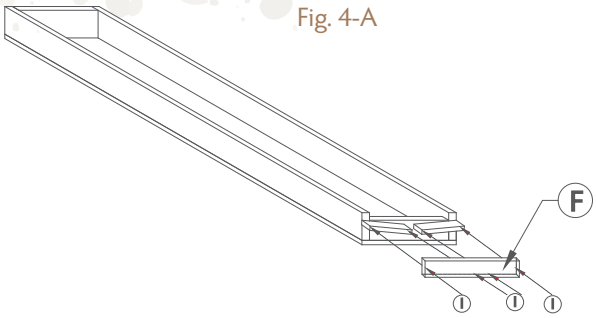

7. Insert plastic outfall fitting in 1" opening between boards "E". Insert ½" wood screw into board "F" to secure and fill edges with wood glue.
8. Apply polyurethane finish to entire box using a 2" paintbrush.
9. Box assembled w/overall dimensions is shown in Fig. 5-A.

Fig. 5-A

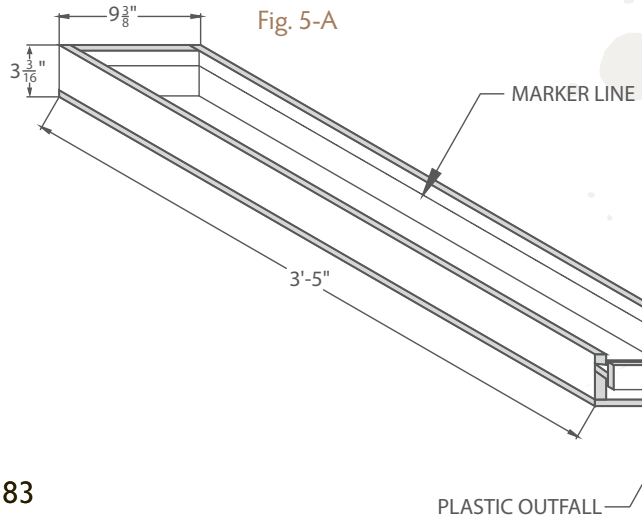

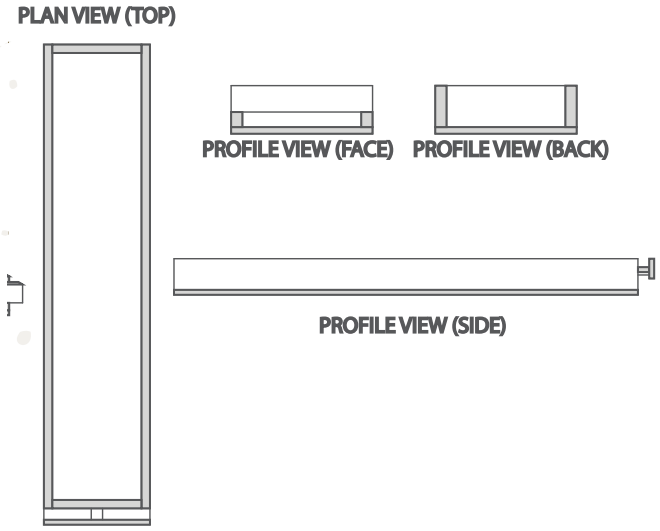

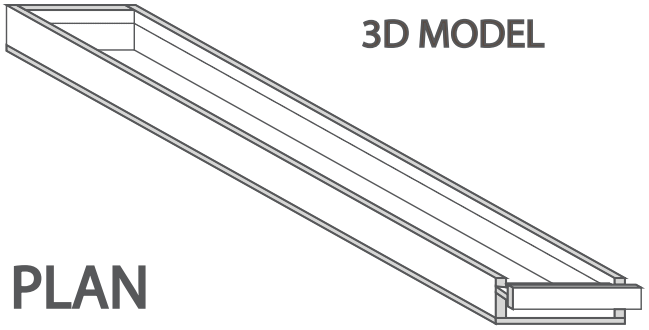

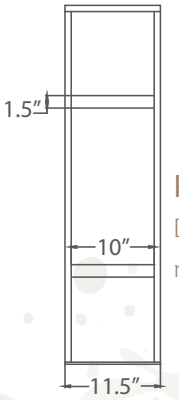

Rainbox Stand Design

Dimensions and plans for building a rainbox stand with slope.